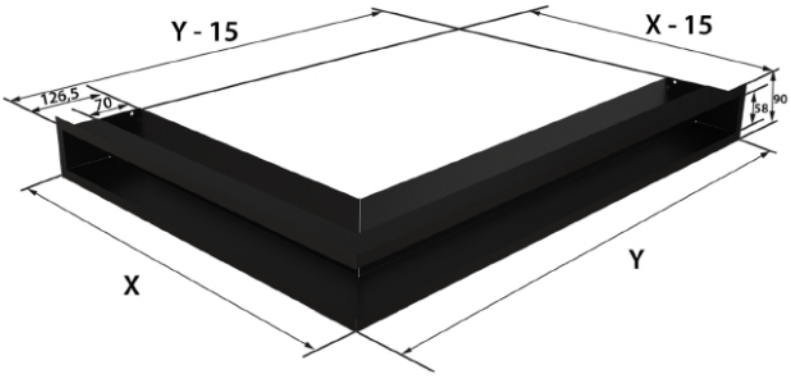

Model:	X	Y	⇄
LUFT/NS/90/45S	560	560	497
LUFT/NL/90/45S	766	547	595
LUFT/NP/90/45S	547	766	595
LUFT/NL/9/40/45S	600	400	436
LUFT/NP/9/40/45S	400	600	436
LUFT/NL/9/8040/45S	800	400	537
LUFT/NP/9/8040/45S	400	800	537

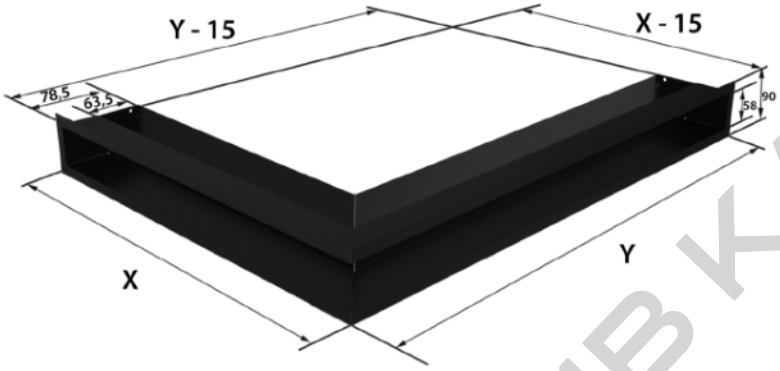

Model:	X	Y	⇄
LUFT/NS/90/45S/SF	560	560	497
LUFT/NL/90/45S/SF	766	547	595
LUFT/NP/90/45S/SF	547	766	595
LUFT/NL/9/40/45S/SF	600	400	436
LUFT/NP/9/40/45S/SF	400	600	436
LUFT/NL/9/8040/45S/SF	800	400	537
LUFT/NP/9/8040/45S/SF	400	800	537